In Design

BIDSHEET

for

PROJECT : E1813857

CST: TUDOR & DIMOND INTERSECT RELO

Work Request:	**E1813857**
Design No.:	**1. CST: TUDOR & DIMOND INTERSECT RELO**
Capital Account:	**10729/000/03/7665**
Reimbursible Account:	/ / /
Retirement Account:	**10880/326/03/7665**
Work Plan No:	
Project Type:	**Relocation-Agency**

Reviewed by Designer/Project Engineer: MC FOR SM Date: 5/2/2022
Sue Mattson

Reviewed by Supervisor/Manager: Mike Miller Date: 5/2/2022
Supervisor

Remarks:

ASSEMBLY UNITS BID SHEET

In Design

Project: E1813857

CST: TUDOR & DIMOND INTERSECT RELO

Contractor: _____

Assembly Unit	Proposed Quantity	Actual Quantity	Labor	Material	Labor & Material	Extended Labor & Material
750 CONC 15KV	5.400					
CLEAN CNDT	1.735					
De-water Vault	2.000					
MANHOURS	225.000					
SHUR2-5	0.045					
STAG-2	1.000					
SUM1F	1.000					
SUM1-GPA	4.000					
SUM3-9	1.000					
SUM5026H	0.125					
SUM5026P	0.010					
SUM6-25D 3 PH	1.000					
SUM6-25F 3 PH	6.000					
SUM6-28F 3 PH	1.000					
SUM6-36A	3.000					
SUM6-4EL	3.000					
SUM6-6	2.000					
SUME445F4	1.000					
SUME630F5	4.000					
SUME645F5	4.000					
SUMV-1	8.000					
SUPB-675	1.000					
SUR2-5	0.100					
SURCP	0.085					
SURCR	0.020					
SURL	1.000					
Traffic Control	1.000					
XUR2-11A	10.000					
XUR2-12	12.000					
* 4/0 BACU	0.510					
* 4/0 CONC	1.920					

Total Extended Labor & Material This Page _____

Total Extended Labor & Material Previous Page _____

Total Extended Labor & Material _____

ASSEMBLY UNITS BID SHEET

In Design

Project: E1813857

Contractor: _____

CST: TUDOR & DIMOND INTERSECT RELO

	Assembly Unit	Proposed Quantity	Actual Quantity	Labor	Material	Labor & Material	Extended Labor & Material
*	750 CONC 15KV	5.490					
*	STAG-2	1.000					
*	SUM1F	2.000					
*	SUM1-GPA	2.000					
*	SUM3-11	1.000					
*	SUM3-9	1.000					
*	SUM6-25D 3 PH	1.000					
*	SUM6-25F 3 PH	8.000					
*	SUM6-28F 3 PH	2.000					
*	SUM6-36A	3.000					
*	SUM6-4EL	4.000					
*	SUMH-810	1.000					
*	SUM5026P	0.120					
*	SUMH-810	1.000					

Total Extended Labor & Material This Page _____

Total Extended Labor & Material Previous Page _____

Total Extended Labor & Material _____

CHUGACH ELECTRIC ASSOCIATION, INC.
Anchorage, Alaska

RIGHT-OF-WAY REPORT

WORK ORDER NO. E1813857

DATE: May 3, 2022
SUBJECT: SOA C St., Tudor & Dimond 3Ø UG Line Relocation
C Street at Tudor Road and Dimond Boulevard Intersections
ADOT&PF Project #0001581/CFHWY00236

Easement Rights:

(X) 1. Dedicated by Plats (84-94, 83-393, 75-55, 2003-58. 85-180).
(X) 2. Specific easements on file.

Permits:

(X) 1. Construction under the SOA Relocation Agreement.
(X) 2. No construction activity identified in standing or running water.
No wetlands permit obtained.

Clearing:

(X) 1. No clearing was identified.

Claudia Roberts
Right-of-Way Agent III

CHUGACH ELECTRIC ASSOCIATION, INC.
Anchorage, Alaska

May 3, 2022

TO: Brad Jackson, Supervisor, Distribution Design

FROM: Claudia Roberts, Right-of-Way Agent III

SUBJECT: SOA C St., Tudor & Dimond 3Ø UG Line Relocation
C Street at Tudor Road and Dimond Boulevard Intersections
Work Order E1813857, Grids 1830, 2230, 2330, Maps 1303-31B & 1203-7B, 7C

RIGHT OF WAY STATUS REPORT

PROJECT DESCRIPTION
ROW Status Report for relocation of electric facilities located along the south side of Tudor Road, between Business Park Boulevard, crossing C Street and A Street, and along the south side of E Dimond Boulevard at C Street, per design drawings dated 12/10/2019.

EASEMENTS
Grid 1830
Westcenter Subdivision (Plat No. 84-194)
Lot 2A: N22' UE

Westcenter Subdivision (Plat 83-393)
Lot 4: N22' UGUE
E10' T&E

Anchorage Business Park Subdivision (Plat No. 75-55)
Block 2, Lot 7: W15' UE

Block 1, Lot 1A: N5' UE
N10' CEA (Serial #2016-000467-0)
Lot 2A: 5' UE adjacent to NE property line bearing S45°06'00" E
E10' UE
CEA (Serial #2016-000467-0) occupying the north 10', AND
Beginning at the NW corner of said Lot 2A,
thence S 00°00'30"W 12.00',
thence S 89°59'30"E 233.39',
thence S 00°00'30"W 8.00',
thence S 89°59'30"W 23.08',
thence N 45°06'00"W 28.34',
thence N 89°59'30"W 236.37' returning to the Beginning

Tudor Business Park Subdivision (Plat No. 2003-58)
Lot 2A-1: N8' Visual Enhancement Landscape Esmt

Lot 1A: N8' Visual Enhancement Landscape Esmt
W20' of the E30' T&E

Grid 2330
SC116 and SC117 were installed under W.O. 7989, Dimond Boulevard Facility Relocation for Victor Road to New Seward Highway.

Crestview Village Subdivision (Plat No. 85-180)
Tract A-3: Chugach specific easement (Bk. 1291, Pg. 829)
Beginning at the NW corner of said Tract,
thence S 76°50'24" E 43.41',
thence S 00°18'22" E 5',
thence S 89°50'23" W 42.24',
thence N 00°18'22' W 15' returning to the Beginning

NOTICE OF CONSTRCTION LETTERS
NOC letters are required for any affected parcel owners.

PERMITS
ADOT&PF Utility Permit is required. The Relocation Agreement for this project will be utilized as the permit with a Permit Memo cover sheet. The permit application will be submitted after construction is completed with an as-built of the project and electrical sheet forms.

No wetlands or streams are shown on current MOA wetlands mapping that affects the project area.

RIGHT-OF-WAY STATUS
There are existing easements for this project. Construction is under the SOA Relocation Agreement. An as-built of the new facilities is required when construction is completed.

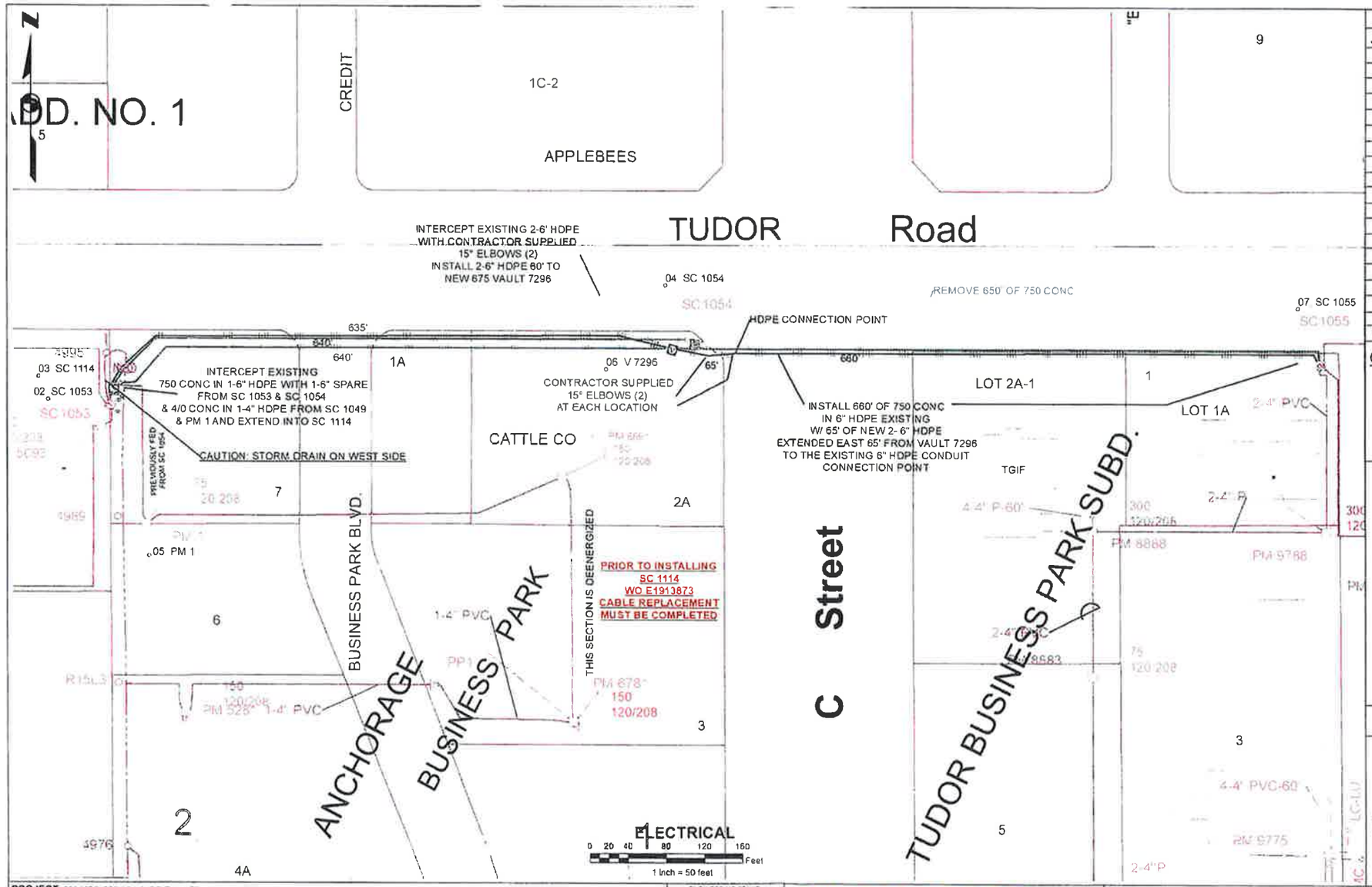

PROJECT: SOA CST TUDOR & DIMOND TURN LANES
ENGINEER / SWATTSON
W.O. # 313 E1813857

NO	DESIGN / CONSTRUCTION / ASBUILT REVISION	DWN BY / DATE	REVIEWED MGR/SUPV / DATE	APPROVED DIRECTOR / DATE
0	ISSUED FOR CONSTRUCTION	11/7/19		

ENGINEERING STAMP

CHUGACH
POWERING ALASKA'S FUTURE

Chugach Electric Association, Inc.
5601 Electron Drive - P.O. Box 196300
Anchorage, Alaska 99519-6300

DRAWING NAME: E1813857

SOA CST TUDOR & DIMOND RELOCATION
3Ø UG LINE RELOCATION
GRID:1830,2230, 2330 MAP: 1203-31B,1203-7B1203-7C
FEEDER: LASS166, SLSS812

W.O. NUMBER: 313 E1813857 SHT.

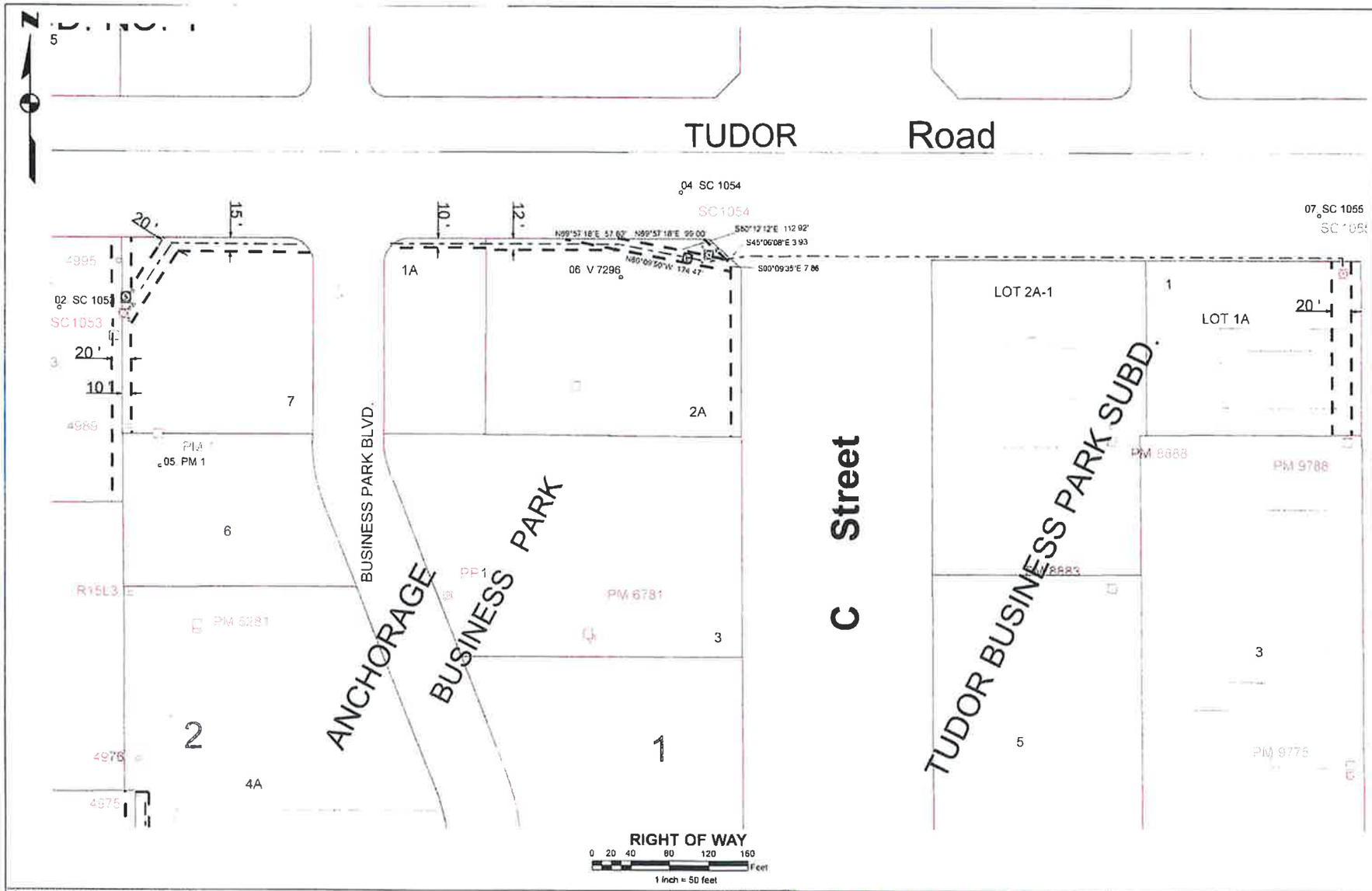

POLE CONTACT RECORD

LOCATION	TEL	CATV

Manuf
Manuf. Date
Volt Rating
Insul. Type
Insul. Size
Cond. Size/Type
Quantity in Feet

INITIAL/DATE

CALL BEFORE YOU DIG!

LOCATE CALL CENTER OF ALASKA (LCCA)	
ANCHORAGE AREA	278 3121
STATEWIDE	800 478 3121
AT&T ALASCOM INC	264-8463
ALASKA RAILROAD UTILITIES	265-2457
ALYESKA CABLE TV (GIRDWOOD)	783-2982
AK/JB AIR BASE	249-1499
MILITARY PETROLEUM FUEL LINES	552-2334
	552-5342
STATE STORM DRAINS & STREET LIGHTS	333 2411

CONSTRUCTION LEGEND

Size	Quantity
PEDESTAL	
POWER POLE	
CONDUIT W/ CONDUCTOR	
SWITCH CABINET	

ROW LEGEND

- ROW LINE
- CENTERLINE OF TRENCH

UNLESS OTHERWISE NOTED CHUGACH FACILITIES WILL BE INSTALLED AS SHOWN BELOW

UNDERGROUND OVERHEAD

Typical Staking

PROJECT: SOA CST TUDOR & DIMOND TURN LANES
ENGINEER / SMATTSON
W.O. # 313 E1813857

NO	DESIGN / CONSTRUCTION / ASBUILT REVISION	DWN BY / DATE	REVIEWED UGR/SUPV / DATE	APPROVED DIRECTOR / DATE
0	ISSUED FOR CONSTRUCTION	11/7/19	11/7/19	

ENGINEERING STAMP

CHUGACH
POWERING ALASKA'S FUTURE

Chugach Electric Association, Inc.
5601 Electron Drive - P.O. Box 196300
Anchorage, Alaska 99519-6300

DRAWING NAME: E1813857

SOA CST TUDOR & DIMOND RELOCATION
3Ø UG LINE RELOCATION
GRID:1830,2230, 2330 MAP: 1203 31B,1203-7B1203-7C
FEEDER: LASS166, SLSS812

W.O. NUMBER: 313 E1813857

SHT. ___ OF ___

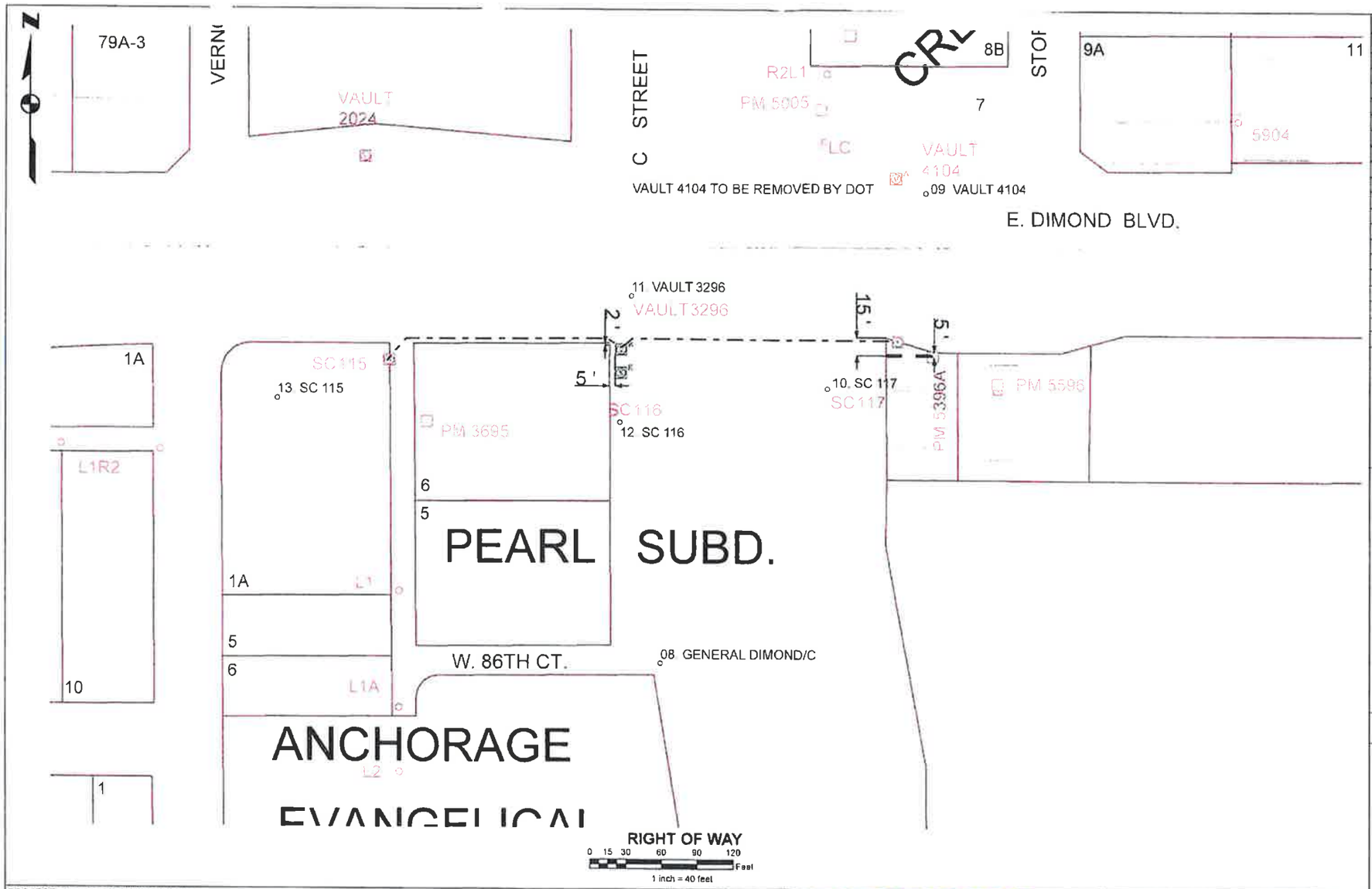

POLE CONTACT RECORD

LOCATION	TEL	CATV

Manuf
Manuf. Date
Volt Rating
Insul. Type
Insul. Size
Cond. Size/Type
Quantity in Feet

INITIAL/DATE

CALL BEFORE YOU DIG!

LOCATE CALL CENTER OF ALASKA (LCCA)

ANCHORAGE AREA	278 3121
STATEWIDE	800 478 3121
AT&T ALASCOM INC	264 8465
ALASKA RAILROAD UTILITIES	265 2457
ALYESKA CABLE TV (GIRDWOOD)	783-2982
KULIS AIR BASE	749-1459
MILITARY PETROLEUM FUEL LINES	552-2314
	552 5347
STATE STORM DRAINS & STREET LIGHTS	333 2411

CONSTRUCTION LEGEND

R O/W LEGEND

Typical Staking

PROJECT: SOA CST TUDOR & DIMOND TURN LANES
ENGINEER / SMATTSON
W.O. # 313 E1813857

NO	DESIGN / CONSTRUCTION / ASBUILT REVISION	DWN BY / DATE	REVIEWED MGR/SUPV / DATE	APPROVED DIRECTOR / DATE
0	ISSUED FOR CONSTRUCTION	11/7/19	11/7/19	

ENGINEERING STAMP

CHUGACH
POWERING ALASKA'S FUTURE

Chugach Electric Association, Inc.
5601 Electron Drive - P.O. Box 196300
Anchorage, Alaska 99519-6300

DRAWING NAME: E1813857

SOA CST TUDOR & DIMOND RELOCATION
3Ø UG LINE RELOCATION
GRID:1830,2230, 2330 MAP: 1203-31B,1203 7B1203 7C
FEEDER: LASS166, SLSS812

W.O. NUMBER: 313 E1813857

SHT.

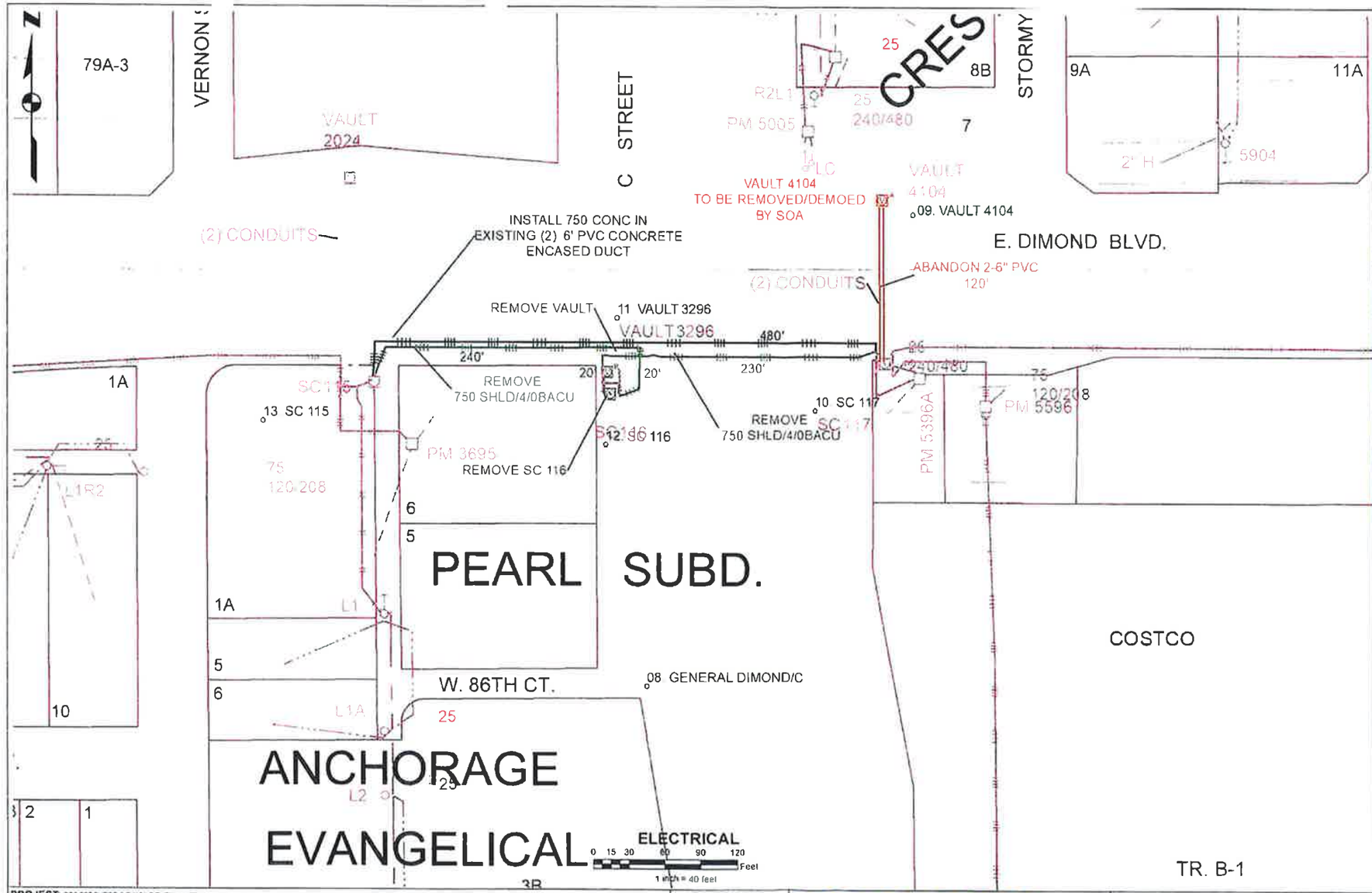

POLE CONTACT RECORD

LOCAT QN	TEL	CATV

INITIAL/DATE

CALL BEFORE YOU DIG!

LOCATE CALL CENTER OF ALASKA (LCCA)

ANCHORAGE AREA	278-3121
STATEWIDE	800-478 3121
AT&T ALASCOM INC	264-8465
ALASKA RAILROAD UTILITIES	265 2457
ALYESKA CABLE TV (GIRDWOOD)	783 2982
KULIS AIR BASE	248-1499
MILITARY PETROLEUM FUEL LINES	552-3334
	552-5342
STATE STORM DRAINS & STREET LIGHTS	333 2411

DISTRIBUTION LEGEND

R.O.W. LEGEND

Typical Staking

PROJECT: SOA CST TUDOR & DIMOND TURN LANES
ENGINEER / SMATTSON
W.O. # 313 E1813857

NO	DESIGN / CONSTRUCTION / ASBUILT REVISION	DWN BY / DATE	REVIEWED MGR/SUPV / DATE	APPROVED DIRECTOR / DATE
0	ISSUED FOR CONSTRUCTION	11/7/19	11/12/19	

ENGINEERING STAMP

CHUGACH
POWERING ALASKA'S FUTURE

Chugach Electric Association, Inc.
5601 Electron Drive - P.O. Box 196300
Anchorage, Alaska 99519-6300

DRAWING NAME: E1813857

SOA CST TUDOR & DIMOND RELOCATION
3Ø UG LINE RELOCATION
CRID:1830,2230, 2330 MAP: 1203-31B,1203-7B1203-7C
FEEDER: LASS166, SLSS812

W.O. NUMBER: 313 E1813857

SHT. ___ OF ___

In Design

STAKING SHEET

for

PROJECT: E1813857

CST: TUDOR & DIMOND INTERSECT RELO

Work Request:	**E1813857**
Design:	**1. CST: TUDOR & DIMOND INTERSECT RELO**
Capital Account:	**10729/000/03/7665**
Reimbursible Account:	/ / /
Retirement Account:	**10880/326/03/7665**
Work Plan No:	
Project Type:	**Relocation-Agency**
Work Order Number:	

Reviewed by Designer/Project Engineer: MC FOR SM Date: 5/2/2022
Sue Mattson

Reviewed by Supervisor/Manager: Mike Miller Date: 5/2/2022
Supervisor

Remarks:

Chugach Electric Association
5601 Electron Drive
Anchorage, AK 99518

Designer _____ Date ___/___/___

Checker _____ Date ___/___/___

Manager _____ Date ___/___/___

Project: E1813857 **Design: 1. CST: TUDOR & DIMOND INTERSECT RELO** **In Design**

CST: TUDOR & DIMOND INTERSECT RELO **Grid:** 2230,2330

Structure: **01. GENERAL TUDOR/C**

Assembly Unit	Activity	#Cond	Qty	Unit Description	Complete	Qty
MANHOURS	**Install**	0	90	MANHOURS (MANHOUR OF LABOR)		
SURL	**Install**	0	1	SURL (LANDSCAPING)		
Traffic Control	**Install**	0	1	Traffic Control (Traffic Control)		

Remarks: GENERAL: TRAFFIC CONTROL/SWPPP-BP WILL BE UNDER DOT.

HOWEVER, TRAFFIC CONTROL IS BEING INCLUDED IN THE BID INCASE A SIDEWALK CLOSURE IS NEEDED IN THE EVENT THE CONTRACTOR ISN'T AVAILABLE.
THE TRAFFIC CONROL UNIT IS FOR BOTH THE CST AND TUDOR INTERSECTION AND THE CST AND DIMOND INTERSECTION.

COORDINATE WITH DOTS CONTRACTOR AND/OR PROJECT MANAGER, (AT THE TIME OF WRITING NO CONTRACTOR HAS BEEN AWARDED THE CONTRACT 12/5/19)
PROJECT MANAGER RORY REDICK
RRREDICK@GCI.NET

ALL UNITS UNDER GENERAL ARE CONSIDER TO BE APPLICABLE TO BOTH INTERSECTIONS

MANHOURS ARE AT CEA INSPECTORS DISCRETION

SURL: DOT CONTRACTOR WILL BE PROVIDING LANDSCAPING FOR THE AREAS DISTURBED IN THE SW CORNER OF C ST AND TUDOR WITHIN DOTS PROJECT AREA. CEA CONTRACTOR WILL BE RESPONSIBLE FOR LANDSCAPING ANY OTHER REMAINING AREAS DISTURBED DURING CONSTRUCTION.

Structure: **02. SC 1053**

Assembly Unit	Activity	#Cond	Qty	Unit Description	Complete	Qty
SUM1-GPA	**Install**	0	1	SUM1-GPA (GUARD POST W/SLEEVE)		
SUM1-GPA	**Install**	0	1	SUM1-GPA (GUARD POST W/SLEEVE)		
SUM6-25F 3 PH	**Install**	0	1	SUM6-25F (750 MCM PRIMARY TERMINATION)		
SUM6-4EL	**Install**	0	1	3-PH UG CURNT RESET FI, 600A TRIP		
SUM6-25F 3 PH	*Remove*	0	1	SUM6-25F (750 MCM PRIMARY TERMINATION)		
SUM6-4EL	*Remove*	0	1	3-PH UG CURNT RESET FI, 600A TRIP		

Remarks:

Structure: **03. SC 1114**

Assembly Unit	Activity	#Cond	Qty	Unit Description	Complete	Qty
750 CONC 15KV	**Install**	3	25	750 CONC 15KV (WIRE, AL JCN 750MCM EPR)		
CLEAN CNDT	**Install**	1	25	CLEAN CNDT (MANDREL & SWAB)		
SHUR2-5	**Install**	1	20	SHUR2-5 (PRIMARY TRENCH HAND -DIG)		
SUM1F	**Install**	0	1	SUM1F (CONCRETE PAD 600 A SWITCH CAB.)		
SUM1-GPA	**Install**	0	1	SUM1-GPA (GUARD POST W/SLEEVE)		
SUM1-GPA	**Install**	0	1	SUM1-GPA (GUARD POST W/SLEEVE)		
SUM3-9	**Install**	0	1	SUM3-9 (600 A SC 2 FUSES 2 SWITCHES)		
SUM6-25D 3 PH	**Install**	0	1	SUM6-25D (4/0 PRIMARY TERMINATION)		
SUM6-25F 3 PH	**Install**	0	1	SUM6-25F (750 MCM PRIMARY TERMINATION)		
SUM6-25F 3 PH	**Install**	0	1	SUM6-25F (750 MCM PRIMARY TERMINATION)		
SUM6-36A	**Install**	0	1	SUM6-36A (FUSE, S&C END FITTING SML-20)		
SUM6-36A	**Install**	0	1	SUM6-36A (FUSE, S&C END FITTING SML-20)		
SUM6-36A	**Install**	0	1	SUM6-36A (FUSE, S&C END FITTING SML-20)		
SUM6-4EL	**Install**	0	1	3-PH UG CURNT RESET FI, 600A TRIP		
SUME445F4	**Install**	0	1	SUME445F4 (4" FG 45 48")		
SUME645F5	**Install**	0	4	SUME645F5 (6" FG 45 60")		
SURCP	**Install**	1	15	SURCP (PARKING LOT CROSSING)		
750 CONC 15KV	*Remove*	3	25	750 CONC 15KV (WIRE, AL JCN 750MCM EPR)		

Remarks: SHUR2-5 INTERCEPT EXISTING 2-6" HDPE AND 1-4" HDPE THAT RUNS TO SC 1054 HDPE AND EXTEND INTO SC 1114.

1 SUME445F4 AND 4 SUME645F5 ARE FOR IN SC 1114

Structure: **04. SC 1054**

Assembly Unit	Activity	#Cond	Qty	Unit Description	Complete	Qty
4/0 CONC	*Remove*	3	640	4/0 CONC Wire (4/0 CONCENTRIC PRIMARY)		
750 CONC 15KV	*Remove*	3	640	750 CONC 15KV (WIRE, AL JCN 750MCM EPR)		
SUM1F	*Remove*	0	1	SUM1F (CONCRETE PAD 600 A SWITCH CAB.)		
SUM1-GPA	*Remove*	0	1	SUM1-GPA (GUARD POST W/SLEEVE)		

Project: E1813857 **Design: 1. CST: TUDOR & DIMOND INTERSECT RELO** **In Design**

CST: TUDOR & DIMOND INTERSECT RELO **Grid:** 2230,2330

Structure: **04. SC 1054**

Assembly Unit	Activity	#Cond	Qty	Unit Description	Complete	Qty
SUM1-GPA	*Remove*	0	1	SUM1-GPA (GUARD POST W/SLEEVE)		
SUM3-9	*Remove*	0	1	SUM3-9 (600 A SC 2 FUSES 2 SWITCHES)		
SUM6-25D 3 PH	*Remove*	0	1	SUM6-25D (4/0 PRIMARY TERMINATION)		
SUM6-25F 3 PH	*Remove*	0	1	SUM6-25F (750 MCM PRIMARY TERMINATION)		
SUM6-25F 3 PH	*Remove*	0	1	SUM6-25F (750 MCM PRIMARY TERMINATION)		
SUM6-36A	*Remove*	0	1	SUM6-36A (FUSE, S&C END FITTING SML-20)		
SUM6-36A	*Remove*	0	1	SUM6-36A (FUSE, S&C END FITTING SML-20)		
SUM6-36A	*Remove*	0	1	SUM6-36A (FUSE, S&C END FITTING SML-20)		
SUM6-4EL	*Remove*	0	1	3-PH UG CURNT RESET FI, 600A TRIP		

Remarks:

Structure: **05. PM 1**

Assembly Unit	Activity	#Cond	Qty	Unit Description	Complete	Qty
STAG-2	**Install**	0	1	STAG-2 (PRIMARY CABLE TAG)		
STAG-2	*Remove*	0	1	STAG-2 (PRIMARY CABLE TAG)		

Remarks: RETIRE TAG " TO SC 1054"
RETAG SAME "TO SC 1114"

Structure: **06. V 7296**

Assembly Unit	Activity	#Cond	Qty	Unit Description	Complete	Qty
750 CONC 15KV	**Install**	3	635	750 CONC 15KV (WIRE, AL JCN 750MCM EPR)		
CLEAN CNDT	**Install**	1	635	CLEAN CNDT (MANDREL & SWAB)		
SHUR2-5	**Install**	1	10	SHUR2-5 (PRIMARY TRENCH HAND -DIG)		
SUM5026H	**Install**	1	60	SUM5026H - Conduit ((2) 6" HDPE CONDUIT)		
SUM6-28F 3 PH	**Install**	0	1	SUM6-28F (750 MCM PRIMARY SPLICE)		
SUM6-6	**Install**	0	2	SUM6-6 (GROUNDING ASSY)		
SUME630F5	**Install**	0	2	SUME630F5 (6" FG 30 60")		
SUMV-1	**Install**	0	8	CABLE RACK RAO8 & STANCHION		
SUPB-675	**Install**	0	1	3Ø PULL BOX FEEDER		
SUR2-5	**Install**	1	50	SUR2-5 (PRIMARY TRENCH)		
SURCP	**Install**	1	60	SURCP (PARKING LOT CROSSING)		
XUR2-11A	**Install**	0	7	XUR2-11A (XUR2-11A (TYPE II))		
XUR2-12	**Install**	0	10	XUR2-12 (EXPORT)		

Remarks: UTILIZE THE XUR2-12 AND XUR2-11A FOR THE EAST & WEST TRENCHING FROM VAULT 7296 AS NEEDED.
THIS UNIT IS AT THE INSPECTORS DISCRETION

TWO SUME630F5 REPRESENT 2 - 15° ELBOWS SUPPLIED BY THE CONTRACTOR IN THE HORIZONTAL RUN

TWO SUM6-6 INCLUDED SHOULD THERE BE NO UFERS .. MAY BE DELETED BY THE INSPECTOR

T CUT AND PAVE ASPHALT THAT WILL BE CUT ON THE CATTLE CO. PARKING LOT.
CUT AND REPAIR ASPHALT BIKE PATH/CURB AS REQUIRED.
CONTRACTOR IS RESPONSIBLE FOR THE REMOVAL/DISPOSAL OF THE OLD ASPHALT AS REQUIRED

INSTALL THE SUPB-675 SUCH THAT THE 6' END IS FACING N/W AND S/E IN ALIGNMENT WITH THE TRENCH.

Structure: **07. SC 1055**

Assembly Unit	Activity	#Cond	Qty	Unit Description	Complete	Qty
750 CONC 15KV	**Install**	3	660	750 CONC 15KV (WIRE, AL JCN 750MCM EPR)		
CLEAN CNDT	**Install**	1	595	CLEAN CNDT (MANDREL & SWAB)		
SHUR2-5	**Install**	1	15	SHUR2-5 (PRIMARY TRENCH HAND -DIG)		
SUM5026H	**Install**	1	65	SUM5026H - Conduit ((2) 6" HDPE CONDUIT)		
SUM6-25F 3 PH	**Install**	0	1	SUM6-25F (750 MCM PRIMARY TERMINATION)		
SUME630F5	**Install**	0	2	SUME630F5 (6" FG 30 60")		
SUR2-5	**Install**	1	50	SUR2-5 (PRIMARY TRENCH)		
SURCP	**Install**	1	10	SURCP (PARKING LOT CROSSING)		
SURCR	**Install**	1	20	SURCR (STATE/MOA ROAD CROSSING)		
750 CONC 15KV	*Remove*	3	650	750 CONC 15KV (WIRE, AL JCN 750MCM EPR)		
SUM6-25F 3 PH	*Remove*	0	1	SUM6-25F (750 MCM PRIMARY TERMINATION)		

Remarks: TWO SUME630F5 REPRESENT 2 - 15° ELBOWS SUPPLIED BY THE CONTRACTOR

Project: E1813857 **Design: 1. CST: TUDOR & DIMOND INTERSECT RELO** **In Design**

CST: TUDOR & DIMOND INTERSECT RELO **Grid:** 2230,2330

Structure: **08. GENERAL DIMOND/C**

Assembly Unit	Activity	#Cond	Qty	Unit Description	Complete	Qty
MANHOURS	**Install**	0	10	MANHOURS (MANHOUR OF LABOR)		

Remarks:

Structure: **09. VAULT 4104**

Assembly Unit	Activity	#Cond	Qty	Unit Description	Complete	Qty
SUM5026P	Abandon	1	120	SUM5026P - Conduit ((2) 6" PVC CONDUIT)		
SUMH-810	Abandon	0	1	Pull Vault - 8x10		

Remarks: SUMH-810 ABANDON REPRESENTS THE OLDER TYPE VAULT INSTALLED UNDER WO 7978. THIS VAULT WILL BE DEMOED BY THE SOA CONTRACTOR.
THIS VAULT IS CONNECTED TO 2-6" PVC AND EXTENDED TO SC 117. ABANDON THE 2-6" PVC

Structure: **10. SC 117**

Assembly Unit	Activity	#Cond	Qty	Unit Description	Complete	Qty
De-water Vault	**Install**	0	1	De-water Vault (De-water Vault Lump Sum Unit)		
SUM6-25F 3 PH	**Install**	0	1	SUM6-25F (750 MCM PRIMARY TERMINATION)		
SUM6-4EL	**Install**	0	1	3-PH UG CURNT RESET FI, 600A TRIP		
SUM6-25F 3 PH	*Remove*	0	1	SUM6-25F (750 MCM PRIMARY TERMINATION)		
SUM6-4EL	*Remove*	0	1	3-PH UG CURNT RESET FI, 600A TRIP		

Remarks: THE EXISTING CONCRETE COVER/ VAULT SECTION WILL BE REPLACED AS DESIGNED BY CEA PLANNING ENGINEER ON JO 248240

UTILIZE MANHOURS FOUND UNDER GENERAL FOR OUTAGE AND SWITCHING AS REQUIRED

OUTAGE TO JIFFY LUBE TIRE SHOP AND CORPORATE OFFICE BEING FED FROM PM 5396A L134424756 MAX DEMAND 11KW 240/480 . 337-5538 OR THE MAIN BUILDING 522-3800 OFFICE MANAGER JAMES.
HOURS:
MON-SAT 8AM-6PM
SUNDAY 10AM-5PM

CONTRACTOR IS TO PROVIDE DUCT IDENTIFICATION ABOVE THE ABANDONED CONDUIT THAT MEETS THE CEA SUMV-3 SPECIFICATION THAT STATES THAT THE CONDUIT TO THE NORTH IS ABANDONED. UTILIZE MANHOURS FOUND UNDER GENERAL FOR TIME AND MATERIAL FOR THIS UNIT.

FAULT INDICATOR INSTALL AND REMOVE HAS BEEN INCLUDED TO REPLACE THEM IF THEY ARE THE OLDER VERSION. THIS UNIT IS AT THE INSPECTORS DISCRETIOIN

Structure: **11. VAULT 3296**

Assembly Unit	Activity	#Cond	Qty	Unit Description	Complete	Qty
De-water Vault	**Install**	0	1	De-water Vault (De-water Vault Lump Sum Unit)		
MANHOURS	**Install**	0	125	MANHOURS (MANHOUR OF LABOR)		
SUM5026P	**Install**	1	10	SUM5026P - Conduit ((2) 6" PVC CONDUIT)		
XUR2-11A	**Install**	0	3	XUR2-11A (XUR2-11A (TYPE II))		
XUR2-12	**Install**	0	2	XUR2-12 (EXPORT)		
4/0 BACU	*Remove*	1	230	4/0 BACU Wire (4/0 BARE COPPER NEUTRAL)		
4/0 BACU	*Remove*	1	20	4/0 BACU Wire (4/0 BARE COPPER NEUTRAL)		
750 CONC 15KV	*Remove*	3	25	750 CONC 15KV (WIRE, AL JCN 750MCM EPR)		
750 CONC 15KV	*Remove*	3	230	750 CONC 15KV (WIRE, AL JCN 750MCM EPR)		
SUM6-28F 3 PH	*Remove*	0	1	SUM6-28F (750 MCM PRIMARY SPLICE)		
SUM6-28F 3 PH	*Remove*	0	1	SUM6-28F (750 MCM PRIMARY SPLICE)		
SUMH-810	*Remove*	0	1	Pull Vault - 8x10		

Remarks: UTILIZE MANHOURS TO CONNECT 2-6" PVC EAST AND 2-6" PVC WEST AND COVER WITH CONCRETE SLURRY.

PULL NEW 750 CONC BETWEEN SC 115 AND SC 117I

Structure: **12. SC 116**

Assembly Unit	Activity	#Cond	Qty	Unit Description	Complete	Qty
4/0 BACU	*Remove*	1	20	4/0 BACU Wire (4/0 BARE COPPER NEUTRAL)		
750 CONC 15KV	*Remove*	3	20	750 CONC 15KV (WIRE, AL JCN 750MCM EPR)		
SUM1F	*Remove*	0	1	SUM1F (CONCRETE PAD 600 A SWITCH CAB.)		
SUM3-11	*Remove*	0	1	SUM3-11 (600 A SC 1 FUSE 3 SWITCHES)		
SUM6-25F 3 PH	*Remove*	0	1	SUM6-25F (750 MCM PRIMARY TERMINATION)		
SUM6-25F 3 PH	*Remove*	0	1	SUM6-25F (750 MCM PRIMARY TERMINATION)		
SUM6-4EL	*Remove*	0	1	3-PH UG CURNT RESET FI, 600A TRIP		

Project: E1813857 **Design: 1. CST: TUDOR & DIMOND INTERSECT RELO** **In Design**

CST: TUDOR & DIMOND INTERSECT RELO **Grid:** 2230,2330

Remarks:

Structure: **13. SC 115**

Assembly Unit	Activity	#Cond	Qty	Unit Description	Complete	Qty
750 CONC 15KV	**Install**	3	480	750 CONC 15KV (WIRE, AL JCN 750MCM EPR)		
CLEAN CNDT	**Install**	1	480	CLEAN CNDT (MANDREL & SWAB)		
SUM6-25F 3 PH	**Install**	0	1	SUM6-25F (750 MCM PRIMARY TERMINATION)		
4/0 BACU	*Remove*	1	240	4/0 BACU Wire (4/0 BARE COPPER NEUTRAL)		
750 CONC 15KV	*Remove*	3	240	750 CONC 15KV (WIRE, AL JCN 750MCM EPR)		
SUM6-25F 3 PH	*Remove*	0	1	SUM6-25F (750 MCM PRIMARY TERMINATION)		

Remarks:

OUTAGE:
B&B AUTOMATIC TRANSMISSION SHOP
458 DIMOND BLV
CATHY JO NOVOTNEY
349-3573
OPEN:
MON-FRI 8AM-5PM
CLOSED SAT. AND SUN.

AURORA BAPTIST CHURCH
514 DIMOND BLVD
PASTOR GREGORY CLARK
248-4222
360-6522
CLOSED MON. TUES - THURS-SAT
OPEN WED 7PM-9PM
SUNDAY 9AM-12PM & 6:30PM -9PM

THE REMAINING OUTAGE WILL BE RESIDENTIAL
HANG DOOR HANGERS 24 HRS PRIOR TO OUTAGE WITH TIME AND DATE OF OUTAGE

6/23

4/4/2022 11:00:53

CHUGACH ELECTRIC ASSOCIATION, INC.
MATERIAL ISSUE TICKET

Project : E1813857
Work Request: E1813857

CST: TUDOR & DIMOND INTERSECT RELO

In Design

Capital Account: 10729/000/03/7665
Reimbursible Account: / / /
Retirement Account: 10880/326/03/7665

Design : 1. CST: TUDOR & DIMOND INTERSECT RELO

Description	Part Number	Quantity Orderd	Issued
Inventory			
WIRE, AL JCN 15KV #4/0	0000000343	115	
WIRE, AL JCN 15KV 750MCM EPR	0000000346	6,630	
WIRE, CU SDB #4/0 STR (19 STR.)	0000000378	90	
CONNECTOR, CONNECTOR,SC EQUIPMENT GROUND,4/0 AWG	0000001451	5	
LUG, COMP LUG AL 2H #4/0	0000001513	3	
LUG, COMP LUG AL 2H 750	0000001515	18	
FASTENER, CLAMP GROUND ROD 3/4"	0000001532	2	
FASTENER, CLAMP, GROUND ROD, 4/0 AWG	0000001533	2	
FUSE, S&C 14.4 SMU-20 065E	0000001708	6	
FUSE, S&C END FITTING SML-20	0000001709	3	
CABINET, SWITCH PMH-09 (600A) 15KV	0000002421	1	
PAD, CONC. SUM1-F 600A SW CABINET 15KV	0000003746	1	
LINE, GROUND ROD 3/4" X 8'	0000004067	4	
CONDUIT, PVC 6"	0000004160	22	
CONDUIT, FG EL 45 DEGREE 4" 48" RADI	0000004183	1	
CONDUIT, FG EL 45 DEG 6" 60" RADI	0000004185	4	
PAD, CONC. GUARD POST 9'	0000004186	4	
KIT, PRIMARY SPLICE 15KV 750MCM JCN	0000004513	3	
LINE, BRACKET CABLE SUPPORT	0000004646	18	
KIT, PRIMARY TERM 15KV 3/0-350MCM JCN	0000004772	3	
KIT, PRIMARY TERM 15KV 750MCM JCN	0000004773	18	
CONDUIT, HDPE 6"	0000011888	275	
LINE, UG INDICATOR FAULT CURRENT RESET 600A TRIP (350-750 KCMIL)	0000013367	3	
CONDUIT, FG EL 30 DEG 6" 60" RADI	0000015050	4	
PAD, CONC. GUARD POST COVER	0000015824	4	
Cable Rack, Stanchion, Underground Devices CR12-B	0000017446	8	
Cable Rack, 8", Underground Devices RA08	0000017447	8	
Pull Vault, Top Section, UV 675-TL-2-332P ((3,300 lbs.)	0000017448	1	
Pull Vault, Middle Section, UV 675-MLW (6,250 lbs.)	0000017449	1	
Pull Vault, Base, UV 675-BL (3,680 lbs.)	0000017450	1	
Concrete Anchor, 303 stainless steel, 1/2-13	0000017451	8	
Washer, 1-1/4 round, flat, 9/16" hole, 316 stainless	0000017452	8	
Bolt, Cap Screw, 1/2"-13 x 1-3/8, 316 stainless steel	0000017453	8	
Non-Inventory			
BLUE & GREEN CEA DECAL NON INV	0000010321	2	
PADLOCKS	0000010613	4	
WEDGE ANCHOR .5 X 2.75 NON-INV	0000010657	4	

Remarks:

Control Number _____
Legal Description _____
Charge for Materials Yes ___ No ___ Sale ___ P.O. No. _____
Issued By _____ Received By _____ Date ___/___/___
Contractor _____
Special Notes:

Title: Material Issue Ticket_XSYS

4/4/2022 11:00:53

CHUGACH ELECTRIC ASSOCIATION, INC.
MATERIAL RETIREMENT TICKET

Project : E1813857
Work Request: E1813857

CST: TUDOR & DIMOND INTERSECT RELO

In Design

Design : 1. CST: TUDOR & DIMOND INTERSECT RELO

Capital Account: 10729/000/03/7665
Reimbursible Account: / / /
Retirement Account: 10880/326/03/7665

Description	Part Number	Qty. Retired	Retired
S&C 14.4 SMU-20 065E	0000001708	3	_____
S&C END FITTING SML-20	0000001709	3	_____
SWITCH PMH-09 (600A) 15KV	0000002421	1	_____
SWITCH PMH-11 (600A) 15KV	0000002423	1	_____

Remarks:

Control Number _____
Legal Description _____
Charge for Materials Yes ___ No ___ Sale ___ P.O. No. _____
Issued By _____ Received By _____ Date ____/____/____
Contractor _____
Special Notes:

Sue Mattson

From: peoplesoft@chugachelectric.com
Sent: Thursday, December 12, 2019 3:26 PM
To: Sue Mattson
Cc: Denise Elsenbast; Pat Lorentz
Subject: ArcFM Designer Order Submitted: DSN313_3

Order DSN313_3 submitted on 12-DEC-19 by SUEM.
Account :10729-000-03-7665
Project :E1813857-GENERAL
Number of Lines:33
Open Order in PeopleSoft

Order	Line	Item	Qty	UOM	Descr
DSN313_3	1	0000000343	115	EA	WIRE, AL JCN 15KV #4/0
DSN313_3	2	0000000346	6630	EA	WIRE, AL JCN 15KV 750MCM EPR
DSN313_3	3	0000000378	90	EA	WIRE, CU SDB #4/0 STR (19 STR.)
DSN313_3	4	0000001451	5	EA	CONNECTOR,SC EQUIPMENT GROUND,4/0 AWG
DSN313_3	5	0000001513	3	EA	LUG, COMP LUG AL 2H #4/0
DSN313_3	6	0000001515	18	EA	LUG, COMP LUG AL 2H 750
DSN313_3	7	0000001532	2	EA	FASTENER, CLAMP GROUND ROD 3/4"
DSN313_3	8	0000001533	2	EA	FASTENER, CLAMP, GROUND ROD, 4/0 AWG
DSN313_3	9	0000001708	6	EA	FUSE, S&C 14.4 SMU-20 065E
DSN313_3	10	0000001709	3	EA	FUSE, S&C END FITTING SML-20
DSN313_3	11	0000002421	1	EA	CABINET, SWITCH PMH-09 (600A) 15KV
DSN313_3	12	0000003746	1	EA	PAD, CONC. SUM1-F 600A SW CABINET 15KV
DSN313_3	13	0000004067	4	EA	LINE, GROUND ROD 3/4" X 8'
DSN313_3	14	0000004160	22	EA	CONDUIT, PVC 6"
DSN313_3	15	0000004183	1	EA	CONDUIT, FIBERGLASS ELBOW 45 DEGREE 4" 48" RADIUS
DSN313_3	16	0000004185	4	EA	CONDUIT, FIBERGLASS ELBOW 45 DEG 6" 60" RADI
DSN313_3	17	0000004186	4	EA	PAD, CONC. GUARD POST 9'
DSN313_3	18	0000004513	3	EA	KIT, PRIMARY SPLICE 15KV 750MCM JCN
DSN313_3	19	0000004646	18	EA	LINE, BRACKET CABLE SUPPORT P/N CS820
DSN313_3	20	0000004772	3	EA	KIT, PRIMARY TERM 15KV 3/0-350MCM JCN
DSN313_3	21	0000004773	18	EA	KIT, PRIMARY TERM 15KV 750MCM JCN
DSN313_3	22	0000011888	275	EA	CONDUIT, HDPE 6" (40 FT STICK)
DSN313_3	23	0000013367	3	EA	LINE, UG INDICATOR FAULT CURRENT RESET 600A TRIP (
DSN313_3	24	0000015050	4	EA	CONDUIT, FIBERGLASS ELBOW 30 DEG 6" 60" RADI
DSN313_3	25	0000015824	4	EA	PAD, CONC. GUARD POST COVER
DSN313_3	26	0000017446	8	EA	FIBERGLASS CABLE SUPPORT STANCHION
DSN313_3	27	0000017447	8	EA	FIBERGLASS CABLE SUPPORT ARMS
DSN313_3	28	0000017448	1	EA	CONCRETE PULL BOX 675 COVER, HINGED DOOR STYLE, 3-
DSN313_3	29	0000017449	1	EA	CONCRETE PULL BOX 675, VAULT, 3-PHASE FEEDER"H" VA
DSN313_3	30	0000017450	1	EA	CONCRETE PULL BOX 675, BASE 3-PHASE
DSN313_3	31	0000017451	8	EA	CONCRETE ANCHOR 1/2" "STAINLESS STEEL"
DSN313_3	32	0000017452	8	EA	WASHER, CONCRETE ANCHOR 1/2" STAINLESS STEEL FLAT
DSN313_3	33	0000017453	8	EA	BOLT, CONCRETE ANCHOR 1/2"

Manufacturer: S&C

Model: PMH9 600A

SC 1053

Serial Number: 153545

Manufactured Date: 07/01/2015

Notes:
CAT #55152R4-
EIF2G7K8M2M3

Revised Date: 09/13/2017

Revised WO/JO: E1213299

DIRECTION (Reference to North)

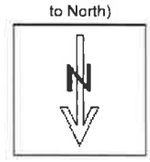

TO:

CONDUCTOR

- 4/0 Conc North to Riser Pole 4995
- 4/0 Conc North to Riser Pole 4995
- 4/0 Conc North to Riser Pole 4995
- 4/0 Conc South to PM 5093
- 4/0 Conc South to PM 5093
- 4/0 Conc South to PM 5093

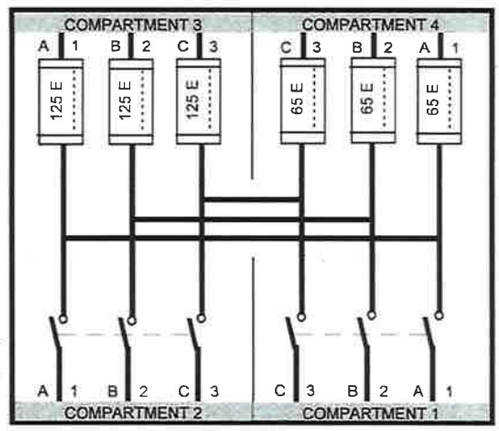

Switch #: 14555
Status: Closed

Switch #: 14554
Status: Closed

TO:

CONDUCTOR

- 750 Conc East to ~~SC 1054~~ SC 1114 Comp 1
- 750 Conc East to ~~SC 1054~~ SC 1114 Comp 1
- 750 Conc East to ~~SC 1054~~ SC 1114 Comp 1
- 750 Conc West to SC 1041 Comp 1
- 750 Conc West to SC 1041 Comp 1
- 750 Conc West to SC 1041 Comp 1

Fault Indicators Installed In Compartments: 2

Fuse Holder Type: SML20

Spare Fuse Holder Installed:

CHUGACH
POWERING ALASKA'S FUTURE

LOCATION
South side of Tudor Road, one lot west of Business Park Blvd

Grid Map Location No.: 1830 – 5094

Inspected by: V. Krivonosov
Install Date: 07/05/2016
Install Work Order ID: E1213299
Feeder: LASS 166

Manufacturer: S & C

Model: PMH 9

SC 1114

Serial Number:

Manufactured Date:

Notes:

Revised Date:

Revised WO/JO:

DIRECTION (Reference to North)

CONDUCTOR	TO:
VACANT	
"	
"	
4/0 CONC SOUTH	TO PM 1
4/0 CONC SOUTH	TO PM 1
4/0 CONC SOUTH	TO PM 1

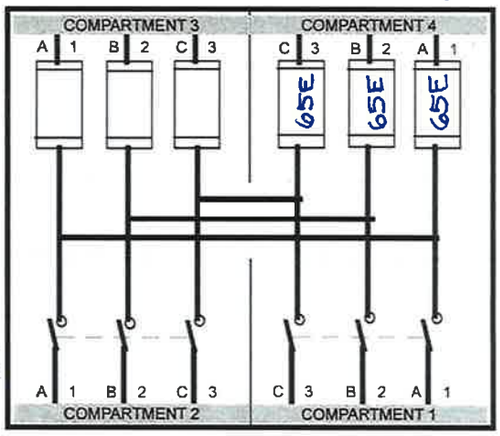

Switch #: 1470 3

Status: CLOSED

Switch #: 1470

Status: CLOSED

CONDUCTOR	TO:
750 CONC EAST TO	SC 1055 THRU
"	VAULT 7296
"	"
750 CONC SOUTH TO	SC 1053
"	
"	

Fault Indicators Installed In Compartments: 2

Fuse Holder Type:

Spare Fuse Holder Installed:

CHUGACH POWERING ALASKA'S FUTURE

LOCATION: TUDOR RD SOUTH SIDE W/O BUSINESS PARK BLVD

Grid Map Location No.: 1830 - 5095

Inspected by:

Install Date:

Install Work Order ID:

Feeder:

REMOVE

Manufacturer: S&C

Model: PMH9 600A

SC 1054

Serial Number: 152091

Manufactured Date: 04/01/2015

Notes: CAT #55152R4-EIF2G7K8M2M3

Revised Date: 09/13/2017

Revised WO/JO: E1213299

DIRECTION (Reference to North)

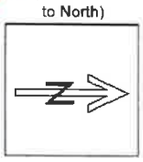

TO:						
CONDUCTOR	VACANT	VACANT	VACANT	4/0 Conc West to PM 1	4/0 Conc West to PM 1	4/0 Conc West to PM 1

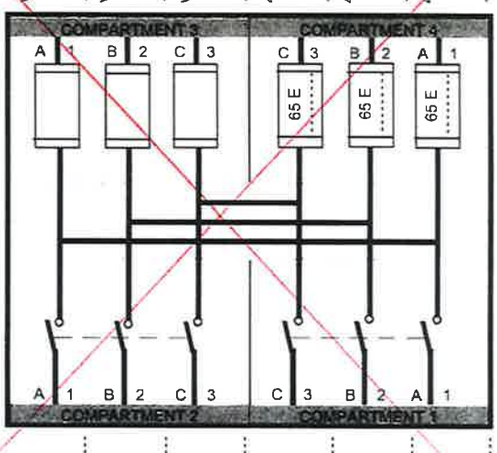

Switch #: 14557

Status: Closed

Switch #: 14556

Status: Closed

TO:						
CONDUCTOR	750 Conc East to SC 1055 Comp 1	750 Conc East to SC 1055 Comp 1	750 Conc East to SC 1055 Comp 1	750 Conc West to SC 1053 Comp 2	750 Conc West to SC 1053 Comp 2	750 Conc West to SC 1053 Comp 2

Fault Indicators Installed In Compartments: 2

Fuse Holder Type: SML20

Spare Fuse Holder Installed:

CHUGACH POWERING ALASKA'S FUTURE

LOCATION

Southwest corner of C Street and Tudor Road

Grid Map Location No.: 1830 – 7396

Inspected by: V. Krivonosov

Install Date: 07/05/2016

Install Work Order ID: E1213299

Feeder: LASS 166

Manufacturer: S&C

Model: PMH9 600A

SC 1055

Serial Number: 152088

Manufactured Date: 04/01/2015

Notes: CAT #55152R4-E1F2G7K8M2M3

Revised Date: 09/13/2017

Revised WO/JO: E1213299

DIRECTION (Reference to North)

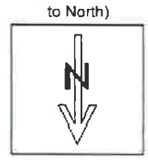

TO: CONDUCTOR

- 4/0 Conc South to PM 0487
- 4/0 Conc South to PM 0487
- 4/0 Conc South to PM 0487
- 4/0 Conc South to PM 9788
- 4/0 Conc South to PM 9788
- 4/0 Conc South to PM 9788

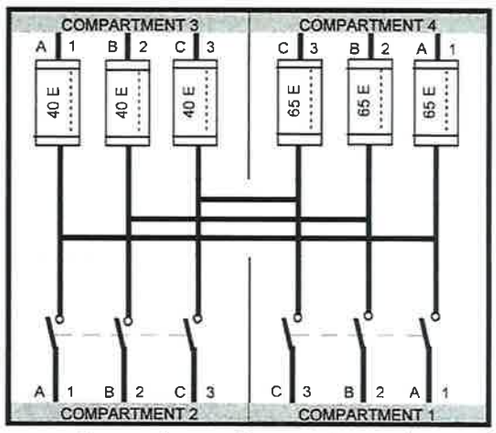

Switch #: 14559

Status: Closed

Switch #: 14558

Status: Closed

TO: CONDUCTOR

- 750 Conc East to SC 1056 via PV 1296, 3996, Comp 2
- 750 Conc East to SC 1056 via PV 1296, 3996, Comp 2
- 750 Conc East to SC 1056 via PV 1296, 3996, Comp 2
- 750 Conc West to ~~SC 1054~~ SC 1114 Comp 2
- 750 Conc West to ~~SC 1054~~ SC 1114 Comp 2
- 750 Conc West to ~~SC 1054~~ SC 1114 Comp 2

Fault Indicators Installed In Compartments: 2

Fuse Holder Type: SML20

Spare Fuse Holder Installed:

CHUGACH POWERING ALASKA'S FUTURE

LOCATION: Southwest corner of Tudor Road and A Street

Grid Map Location No.: 1830 – 9795

Inspected by: V. Krivonosov

Install Date: 08/08/2016

Install Work Order ID: E1213299

Feeder: LASS 166

Manufacturer: S&C

Model: PMH9 600A

SC 115

Serial Number:

Manufactured Date:

Notes:
Modifed per WO
E1413532
per Pete Carroll 4/10/2015
(Fire Station #9)

Revised Date: 01/04/2002

Revised WO/JO: E1413532

DIRECTION (Reference to North): N

CONDUCTOR	TO:
VACANT	
	#2 Conc South to Riser Pole A15L1
VACANT	
	#4/0 Shld South to PM 3695 (B & B Auto)
	#4/0 Shld South to PM 3695 (B & B Auto)
	#4/0 Shld South to PM 3695 (B & B Auto)

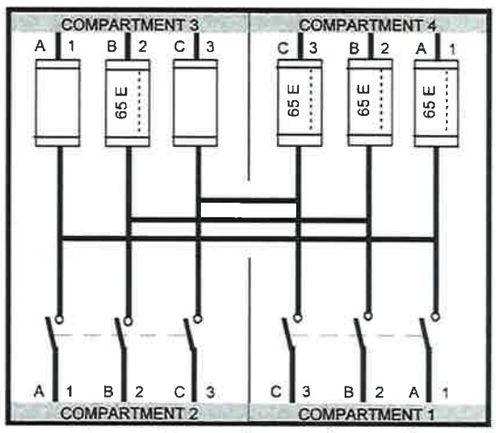

Switch #: 12542
Status: Closed

Switch #: 12541
Status: Closed

CONDUCTOR	TO:
750 Shld East to SC 116 Comp. 1	SC117
750 Shld East to SC 116 Comp. 1	SC117
750 Shld East to SC 116 Comp. 1	SC117
750 Shld West to SC 114 Comp. 2	
750 Shld West to SC 114 Comp. 2	
750 Shld West to SC 114 Comp. 2	

Fault Indicators Installed In Compartments: 1

Fuse Holder Type: SML20

Spare Fuse Holder Installed: Y

CHUGACH
POWERING ALASKA'S FUTURE

LOCATION
Dimond and C Street

Grid Map Location No.: 2330 – 3696

Inspected by: Chris O'Brien
Install Date: 05/28/1986
Install Work Order ID: 7989
Feeder: SLSS 812

Manufacturer: S&C

Model: PMH11 600A

REMOVE SC 116

Serial Number:

Manufactured Date:

Notes:

CAT
#55162R2
-DE161G2HUK8

AS-BUILT E1113225,
5/6/14
V KRIVONOSOV

Revised Date: 04/12/2007

Revised WO/JO: E1113225

DIRECTION (Reference to North)

TO:

CONDUCTOR: VACANT, VACANT, VACANT, VACANT, VACANT, VACANT

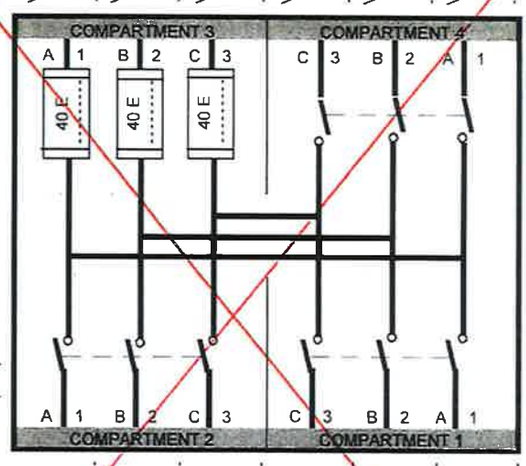

Switch #: 13990
Status: Open

Switch #: 12544
Status: Closed

Switch #: 12543
Status: Closed

TO:

CONDUCTOR:
750 Shld East to SC 117 (Thru vault 3296) Comp. 1
750 Shld East to SC 117 (Thru vault 3296) Comp. 1
750 Shld East to SC 117 (Thru vault 3296) Comp. 1
750 Shld West to SC 115 (Thru Vault 3296) Comp. 2
750 Shld West to SC 115 (Thru Vault 3296) Comp. 2
750 Shld West to SC 115 (Thru Vault 3296) Comp. 2

Fuse Holder Type: SML20

Spare Fuse Holder Installed: Y

Fault Indicators Installed In Compartments: 1

CHUGACH POWERING ALASKA'S FUTURE

LOCATION
Dimond and C Street

Grid Map Location No.: 2330 – 3296

Inspected by: Chris O'Brien
Install Date: 03/15/1986
Install Work Order ID: 7989
Feeder: SLSS 812

Manufacturer: S&C

Model: PMH9 600A

SC 117

Serial Number:

Manufactured Date: 06/01/1985

Notes:
As-Built 1/12/15 E113225
V. Krivonosov

Revised Date: 11/10/2011

Revised WO/JO: E1113225

DIRECTION (Reference to North)

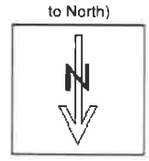

CONDUCTOR	TO:
4/0 Conc South to SC 791, Comp. 2	(Thru PM 5596 & PM 5575)
4/0 Conc South to SC 791, Comp. 2	(Thru PM 5596 & PM 5575)
4/0 Conc South to SC 791, Comp. 2	(Thru PM 5596 & PM 5575)
VACANT	
VACANT	
#2 Conc East to PM 5396A	

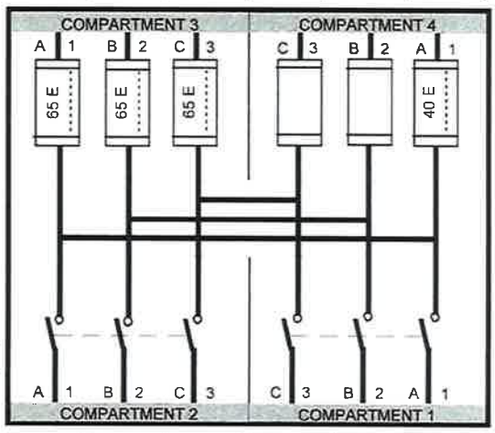

Switch #: 12546
Status: Closed

Switch #: 12545
Status: Closed

CONDUCTOR	TO:
750 Shld East to SC 118 Comp. 1	
750 Shld East to SC 118 Comp. 1	
750 Shld East to SC 118 Comp. 1	
750 Shld West to ~~SC 116~~ SC 115 Comp. 2	(Thru Vault 3296)
750 Shld West to ~~SC 116~~ SC 115 Comp. 2	(Thru Vault 3296)
750 Shld West to ~~SC 116~~ SC 115 Comp. 2	(Thru Vault 3296)

Fault Indicators Installed In Compartments: 1

Fuse Holder Type: SML20

Spare Fuse Holder Installed: Y

CHUGACH
POWERING ALASKA'S FUTURE

LOCATION
Dimond east of C Street

Grid Map Location No.: 2330 – 5396

Inspected by: Harold Wallin
Install Date: 05/28/1986
Install Work Order ID: 7989
Feeder: SLSS 812